Proyecto técnico

Cuadro luminoso

Autores:
Miguel Antonio Agüera Ruiz.
Javier Peña Hódar.
Pedro José Cano Olmo.
Curso: S21ME.
Fecha de inicio: 21/01/2019
Fecha de entrega: 18/03/2019

Introducción

1. Memoria

2. Planos

3. Presupuesto.

4. Datasheet.

1. Memoria

Memoria.

Contenido

Introducción.

este proyecto lo realizan los alumnos de 2º de bachillerato de artes plásticas y el grado superior de mantenimiento electrónico del instituto Politécnico Jesús Marín.

La idea es iluminar el cuadro famoso de Vicent Van Gogh "*La noche estrellada*". Para ello, las estrellas llevarán LEDS, una ciudad en relieve y una bombilla LED de alto lúmenes como foco.

Utilizaremos como microcontrolador el Arduino (UNO) porque es barato el componente y sencilla la programación. El ultrasonido lo utilizaremos para medir la distancia de la persona al cuadro. Los transistores amplifican la corriente de entrada y los módulos de relé conmutan el encendido de las bombillas tanto de filamento como las de LED.

Imagen del cuadro "La noche estrellada"

El objetivo.

El objetivo de este proyecto es que la persona sepa sobre la contaminación lumínica en las ciudades.

Condiciones del proyecto.

Las condiciones de este proyecto sobre la distancia son las siguientes:

- Desde el espectador hasta el cuadro es lejana distancia, se iluminarán las estrellas y la luna.
- Desde espectador hasta el cuadro es *media* distancia, se iluminarán las estrellas, la luna y la ciudad.
- Por último, si la distancia desde espectador hasta a él cuadro es cerca distancia, se iluminará la ciudad y el foco.

Materiales y herramientas.

Los materiales que necesitaremos nos lo facilitarán la clase, pero los diodos LEDS serán reciclados por un circuito de retroiluminación de una televisión antigua.

Estos son los materiales que necesitaremos.

- Arduino Uno

- LEDS Retroalimentación D2GE-400CA-R3 D2GE-400CB-R3

- Resistencia de 330Ω 1/2W

- Resistencia de 10KΩ 1/4W

- Porta bombilla E10

- Bombilla 12V 0,3A E10

- Módulo de x4 Relé 5V

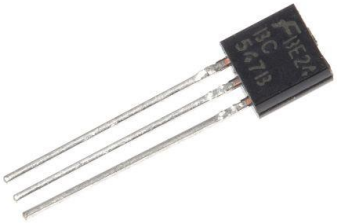

- Transistor BC547B

- Transistor BD139

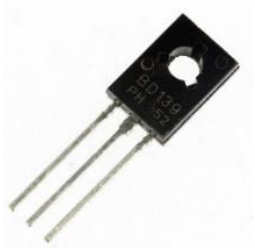

- Módulo ultrasónico hc-SR04. Para la detención a distancia de la persona

- 2 BOMBILLAS LED E27 MATE 150 LEXMA. Solamente necesitaremos una, pero la otra para casos de emergencia

- FLEXO

- Cables

- PCB perforada2x8cm

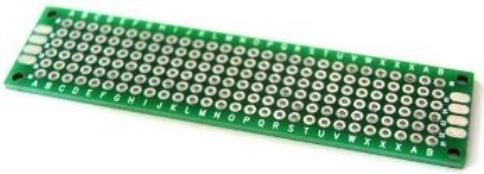

- Estaño para soldar

- Tira pines macho 12 PIN 2.54mm - C.I.

- Interruptor DIP 2P

- Tornillo philips M2.6X10mm - DIN7985

- Tuerca M2x1.5mm – hierro

- Separador hexagonal macho / hembra M3x10mm – metal

- Separador hexagonal H/H M3x10mm – metal

- Lnkey 60pcs Barras de silicona transparente (7x210 mm)

- Regleta de 12 conexiones a tornillo 6mm 5A (negro)

- Transformador de 12V.

Las herramientas para la instalación son las siguientes:

- Ordenador
    - IDLE ARDUINO

- Soldador

- Tijeras electricidad.

- Juegos de destornilladores

- Placa Protoboard

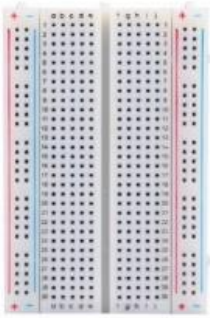

- Alicates

- Fuente de alimentación regulable

- Pistola de silicona caliente

- Mini drill y las brocas

Simulación y comprobación.

En este caso haremos comprobaciones del módulo de potencia, módulo de relé de 4 canales y sensor de ultrasonido.

Módulo de potencia.

Montaremos el módulo de potencia en la placa protoboard, luego lo construiremos como se indica en el esquema eléctrico.

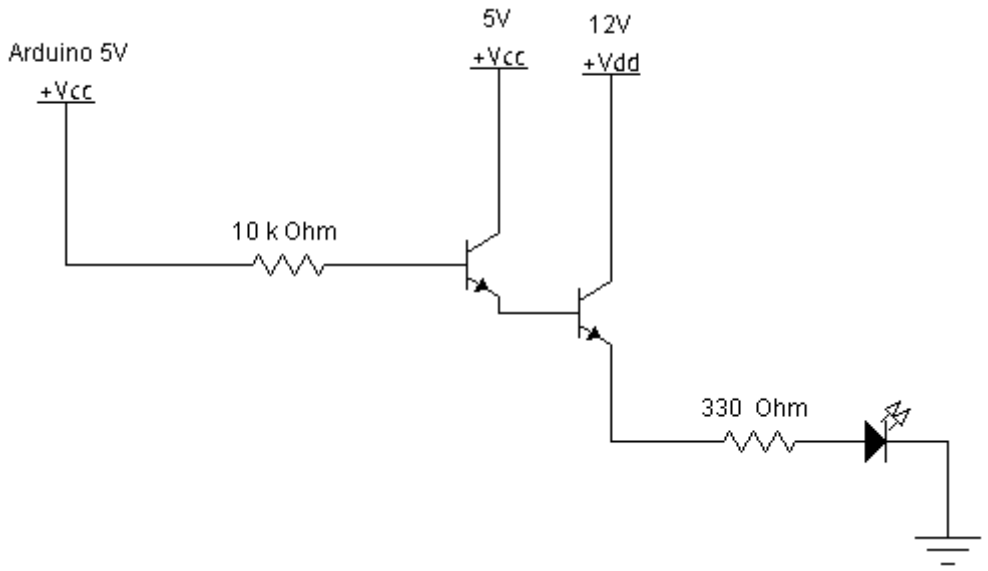

Esquema eléctrico

Activamos mediante la programación el puerto 10 del Arduino para enviar una señal a los transistores. Después, activamos las dos fuentes de alimentación una de 5V y otra de 12V. Finalmente, comprobamos si el LED se enciende, en el caso contrario tendremos que mirar si hay sobretensiones e intentar buscar el fallo.

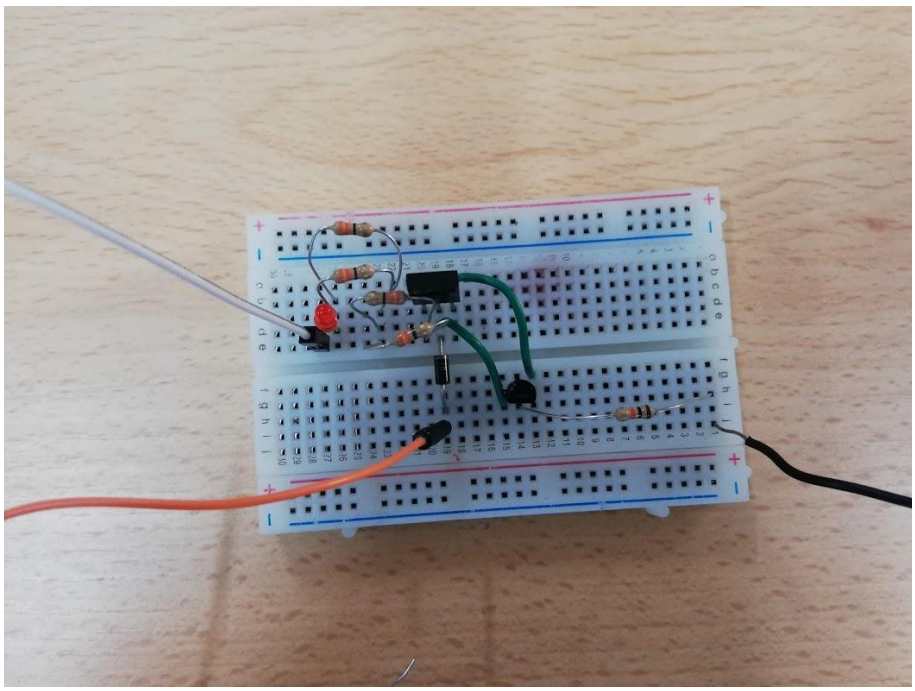

Imagen

Ultrasonido y módulo de relé.

Colocamos unos cables en el ultrasonido donde está el PWM y los otros al módulo del relé. A continuación, alimentamos los módulos de relé con la fuente de alimentación a 5V.

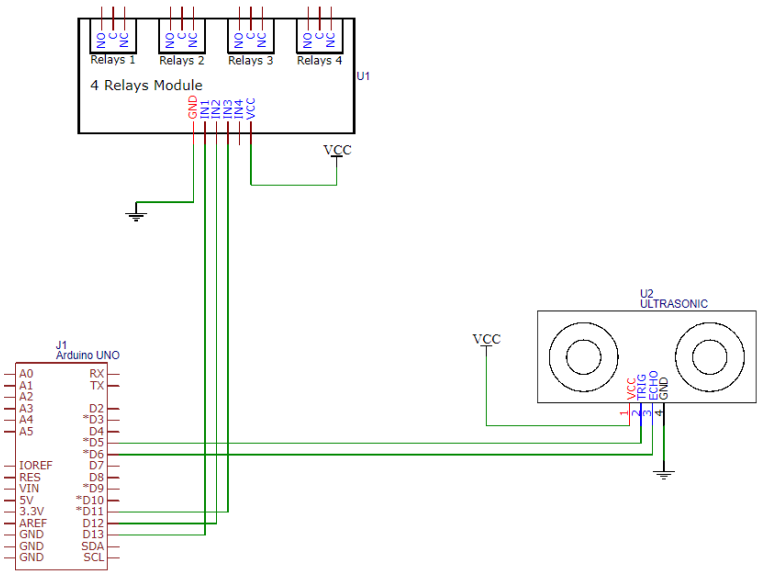

Esquema eléctrico.

Realizamos un programa con los rangos de tiempo de encendido y apagado (10 segundos). Por otra parte determinamos los pines de salida del Arduino que van hacia el módulo del relé.

La comprobación del circuito es la acción de la persona poco a poco se acerque hasta el ultrasonido, cada vez que se detecte se escuchará uno ruido de activación del relé e incluso se encenderá un piloto LED que indica la entrada de la señal. Así hasta llegar a 10 segundos.

En el caso que no funcione se recomienda comprobar la instalación y el programa realizado.

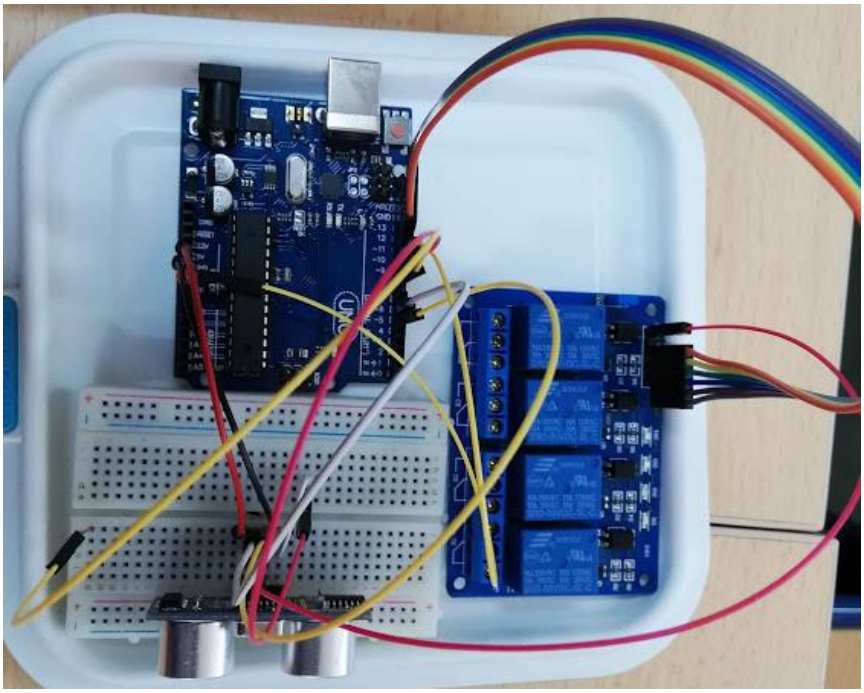

Imagen de la instalación

Programación.

Es en este apartado utilizaremos un ordenador con el programa del Arduino IDE 1.8.8. Antes de realizar realizaremos un diagrama en bloque con la exigencia pedida.

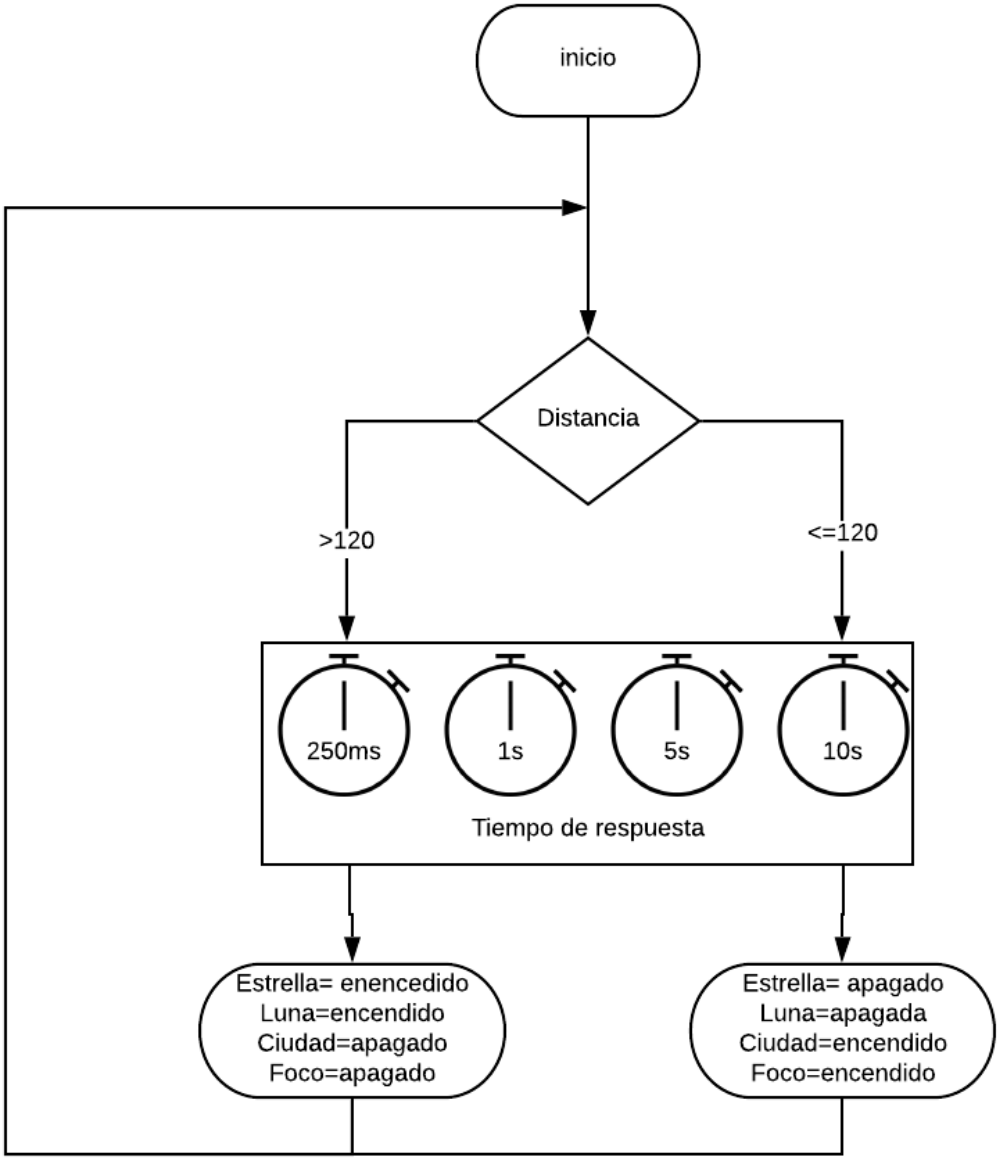

Diagrama de bloque.

Cuando inicia el programa empieza por la distancia de la persona mediante los rangos que determinamos, luego podemos elegir entre los siguientes como 250ms, 1s, 5s, y 10s. A continuación, da las respuestas y al final se reinicia el programa.

Programación del Arduino.

```
float ultraS;

void setup(){
  pinMode(10,OUTPUT); //Estrellas
  pinMode(13,OUTPUT); //Luna
  pinMode(12,OUTPUT); //Casas
  pinMode(11,OUTPUT); //Foco
  //-----------------------------Ultrasonidos
  pinMode(6,OUTPUT); //Trigger
  pinMode(5,INPUT); //Echo
  //-----------------------------Configuración de tiempos
  pinMode(9,INPUT_PULLUP); //5 segundos no cerrado 0.25 segundos si cerrado
  pinMode(8,INPUT_PULLUP); //10 segundos no cerrado 1 segundo si cerrado
}

float ultrasonidos(){
  digitalWrite(6,HIGH);  //se envía un pulso para activar el sensor
  delayMicroseconds(10);
  digitalWrite(6,LOW);
  return((pulseIn(5,HIGH)/2)*0.0343); //devolvemos el valor en cm
}

void loop(){
  ultraS=ultrasonidos();
  if(ultraS>120){
    analogWrite(10,255); //Estrellas Encendidas
    digitalWrite(13,HIGH); // CASAS OFF
    digitalWrite(12,LOW); //Luces de las casas encendidas
    digitalWrite(11,HIGH); //Foco OFF
  }else if (ultraS<=120) {
    analogWrite(10,19); //Estrellas apagadas
    digitalWrite(13,LOW); // CASAS ON
    digitalWrite(12,HIGH); //Luces de las casas encendidas
    digitalWrite(11,LOW); //Foco ON
  }
  //-------------------------------------------------------Configuración de velocidades
  if((digitalRead(9)==LOW)&&(digitalRead(8)==LOW)){
    delay(10000);
  }
  if((digitalRead(9)==LOW)&&(digitalRead(8)==HIGH)){
    delay(5000);
  }
  if((digitalRead(9)==HIGH)&&(digitalRead(8)==LOW)){
    delay(1000);
  }
  if((digitalRead(9)==HIGH)&&(digitalRead(8)==HIGH)){
    delay(250);
  }
  //-------------------------------------------------------Configuración de velocidades
}//FIN DE PROGRAMA
```

En esta programación se separa de la manera siguiente.

- El el Void setup activamos los pines de la siguiente manera:
  - Salidas. Los pines son 6, 11,12 y 13.
  - Las entradas los pines son 5, 8 y 9.
- Salidas a luces: las salidas de los pines 11,12 y 13 del Arduino son estradas digitales que va al módulo de relé de 4 canales, pero la salida del pin 10 es una salida analógica que podemos variar gracias al PWM.
- Los interruptores de tiempo: los pines 8 y 9 son entrada digital del Arduino
  - Si los interruptores 8 y 9 están desactivado se aplica una señal que el tiempo de respuesta es de 10s
  - Si activamos solamente el interruptor del pin 8 y el 9 está desactivado se aplica una señal que el tiempo es de 5s.
  - Si activamos solamente el interruptor del pin 9 y el 8 está desactivado se aplica una señal que el tiempo es de 1s.
  - En el caso que los dos interruptores estén activados se aplica una señal al Arduino que el tiempo de respuesta es de 250ms.
- A cada ron que se encuentra pude suceder estas cosas.
  - *Lejos.* Se activan las estrellas completamente y la luna.
  - *Cerca.* Se activa la ciudad y el foco.
- El ultrasonido hace la función que envía la señal en pulso de PWM del Arduino y cada 10 microsegundos se desactiva. Por último, vuelve la señal y se convierte en valor en cm.

Instalación del proyecto.

En la instalación del proyecto se dividirá en dos partes que serán de electrónica y los exteriores. Haremos según el diagrama de bloque.

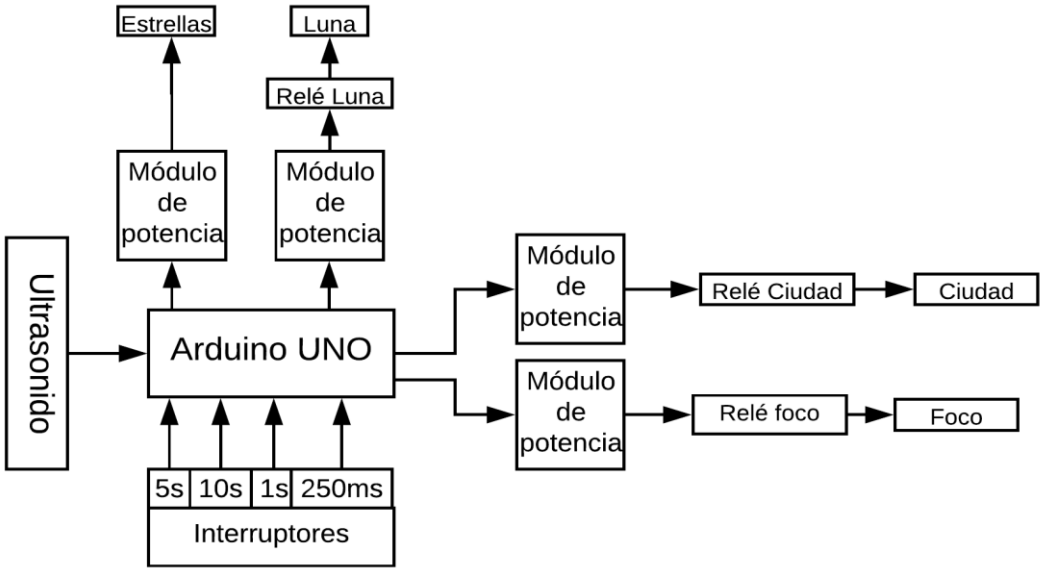

Diagrama de bloque

Electrónica.

Lo primero de todo soldamos los componentes a la PCB perforada como se indica el esquema eléctrico de la estrella. Después colocamos los interruptores. Luego soldamos los pines macho. Al final soldamos mediante estaño la pista como se indica el esquema eléctrico.

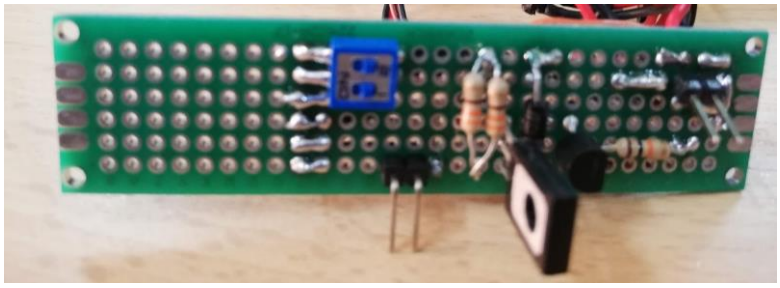

Conectamos mediante tornillería el Arduino UNO Al módulo de relé de 4 canales. Después conectamos la placa PCB mediante los pines al Arduino.

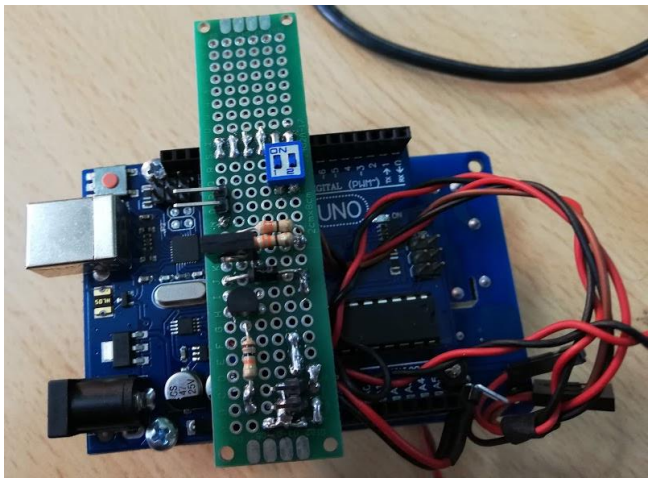

Después conectamos los cables a al módulo de relé y a sus respetivas salidas.

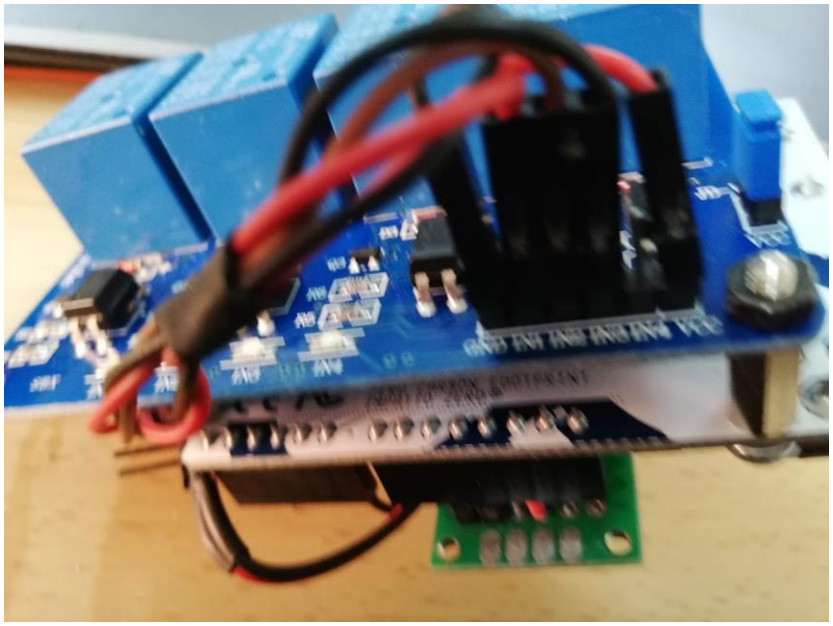

Exteriores.

Con un taladro haremos agujeros a las estrellas y la luna. Después soldamos los leds como se indica los colores (negro-negativo y el verde-positivo). Luego colocamos en las estrellas pegando un de silicona por delante y de detrás. Y colocamos la porta bombilla de la luna en la parte de detrás pegado con silicona. Al final colocamos la bombilla a la luna.

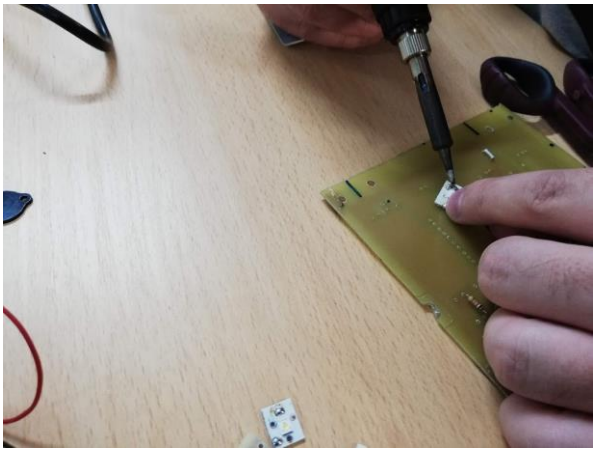

En la parte de la ciudad colocamos la posición de los edificios, después elegimos la colocación de las bombillas y por último la colocación de la caja con el Arduino.

Colocamos en cada caja un numero que hemos colocado también en el tablero que será la posición de la caja. Después elegimos seis cajas que tendrá la bombilla. Luego con un taladro hacemos agujero en los números que estará las bombillas.

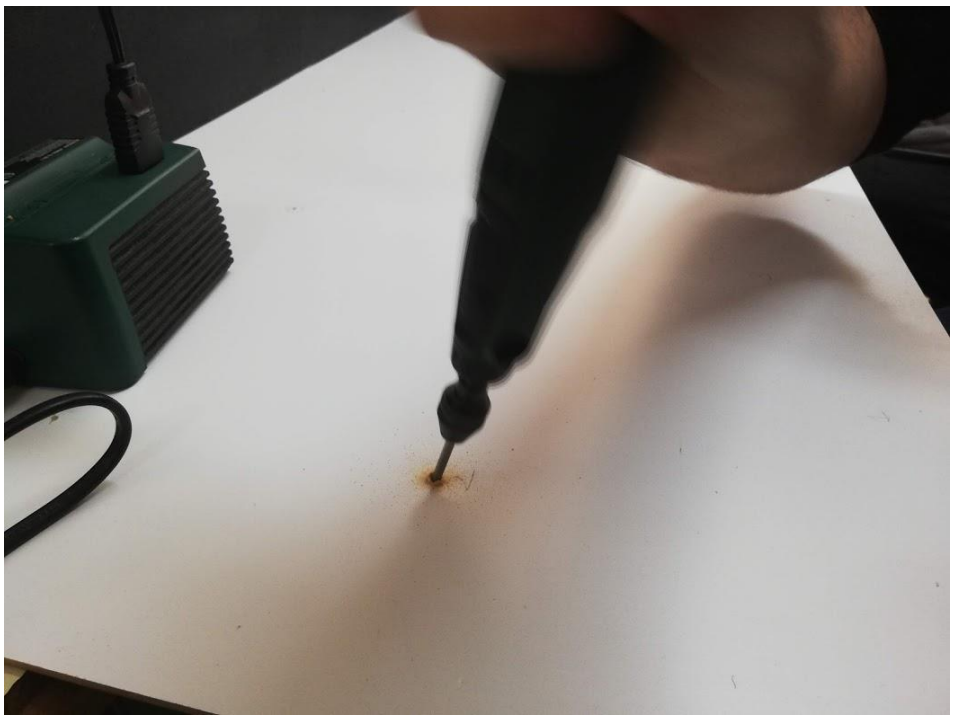

Soldamos los cables a los casquillos, mientras recorta la parte de debajo para la colocación de los casquillos. después lo pegamos en silicona caliente los casquillos y todos los edificios.

Cortamos la tabla de chapón con el tamaño del Arduino, luego hacemos un chapita de metal para la colocación del Arduino al chapón. Después colocamos el Arduino con el chapita de metal al chapón.

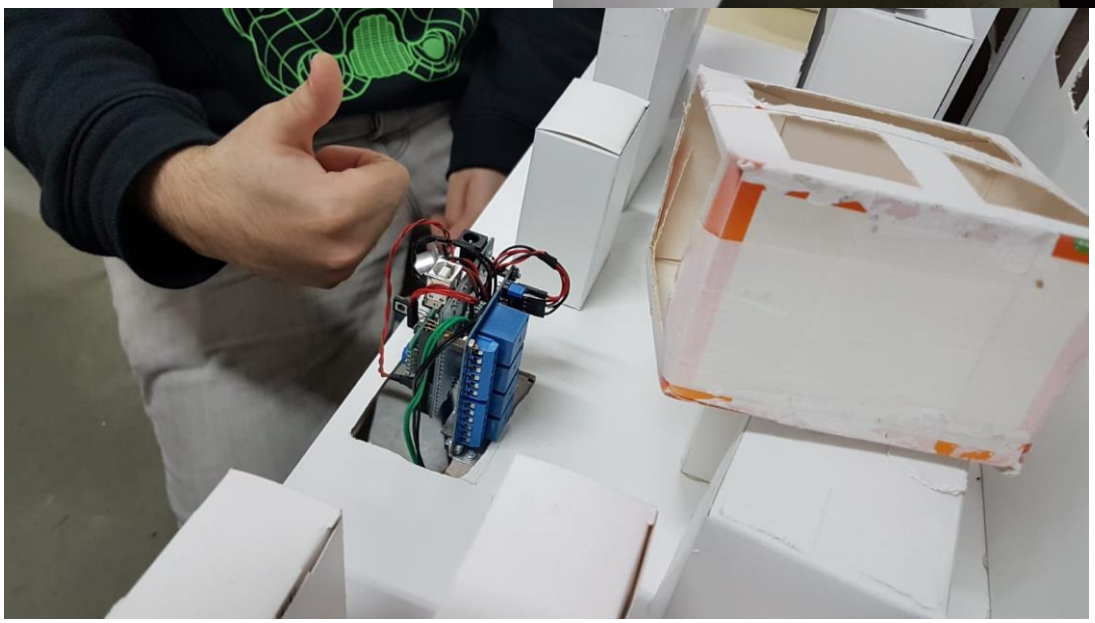

En la parte de detrás del cuadro lo cableamos las estrellas, la ciudad, la luna y el foco, hacia la parte de abajo pegado con silicona caliente.

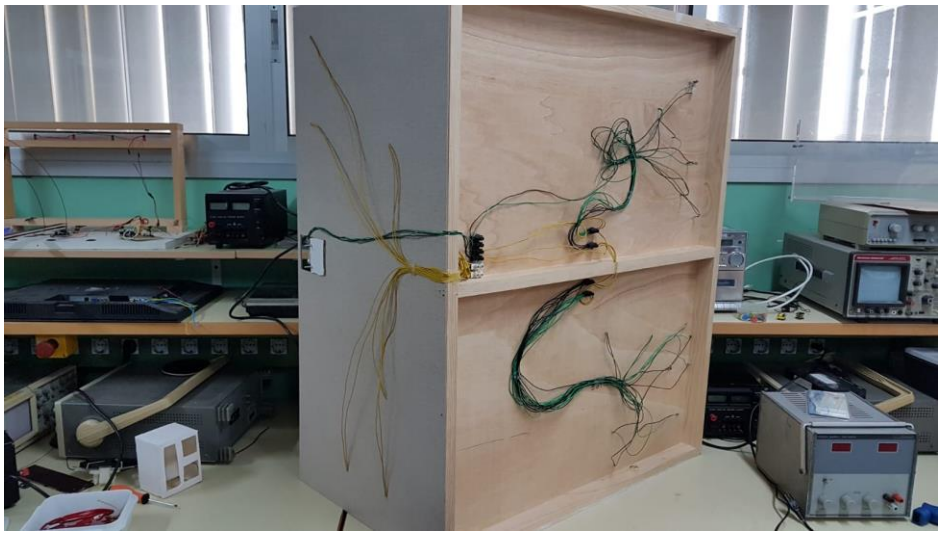

Luego colocamos el ultrasonido y el cable de la fuente de alimentación de 12V al Arduino. Al final de todo colocamos.

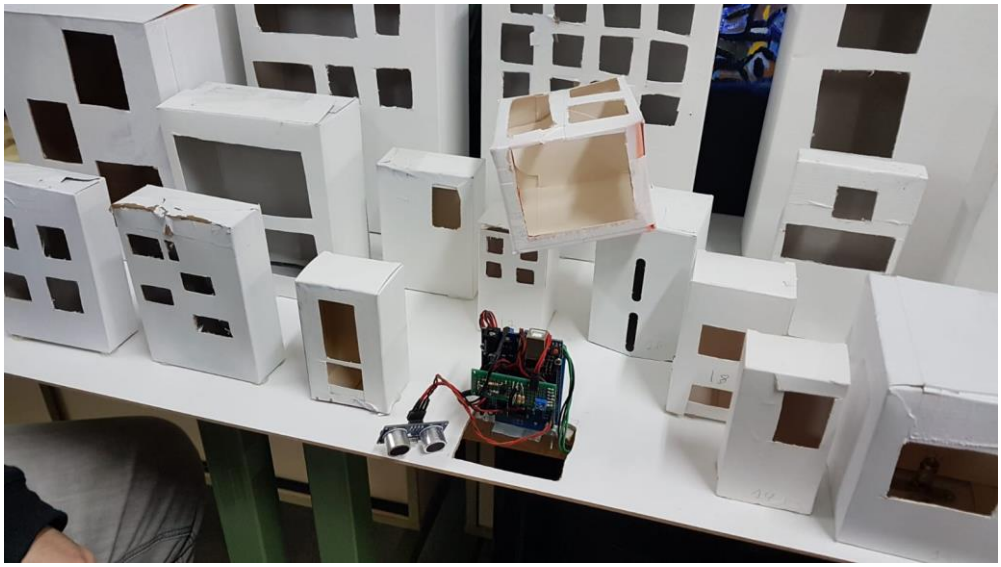

Funcionamiento.

El funcionamiento del circuito es de la persona detecta la posición de la persona y activa uno de los rangos como:

- Lejos: se activa las estrellas y la luna.
- Cerca: se activa la ciudad y el foco.

Los interruptores son para el tiempo de respuesta

- Si los interruptores 8 y 9 están desactivado el tiempo de respuesta es de 10s
- Si activamos solamente el interruptor del pin 8 y el 9 está desactivado el tiempo es de 5s.
- Si activamos solamente el interruptor del pin 9 y el 8 está desactivado el tiempo es de 1s

2. Planos

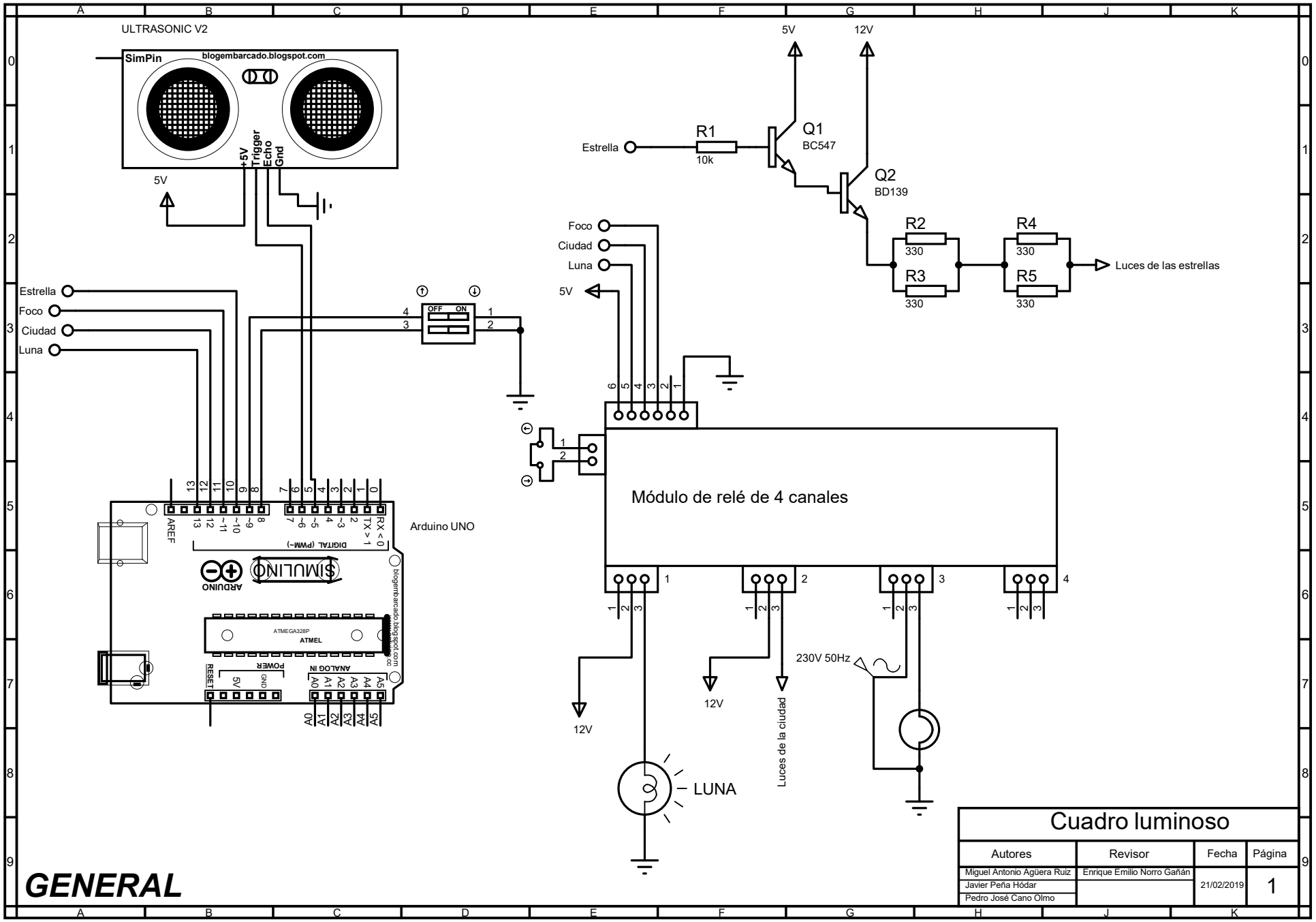
ULTRASONIC V2
SimPin
blogembarcado.blogspot.com
+5V
Trigger
Echo
Gnd
5V
12V
Estrella
R1
10k
Q1
BC547
Q2
BD139
R2
330
R3
330
R4
330
R5
330
Luces de las estrellas
Foco
Ciudad
Luna
OFF
ON
Módulo de relé de 4 canales
Arduino UNO
AREF
DIGITAL (PWM~)
SIMULINO
ARDUINO
ATMEGA328P
ATMEL
POWER
ANALOG IN
RESET
GND
A0
A1
A2
A3
A4
A5
230V 50Hz
Luces de la ciudad
LUNA
GENERAL
Cuadro luminoso
Autores
Revisor
Fecha
Página
Miguel Antonio Agüera Ruiz
Javier Peña Hódar
Pedro José Cano Olmo
Enrique Emilio Norro Gañán
21/02/2019
1

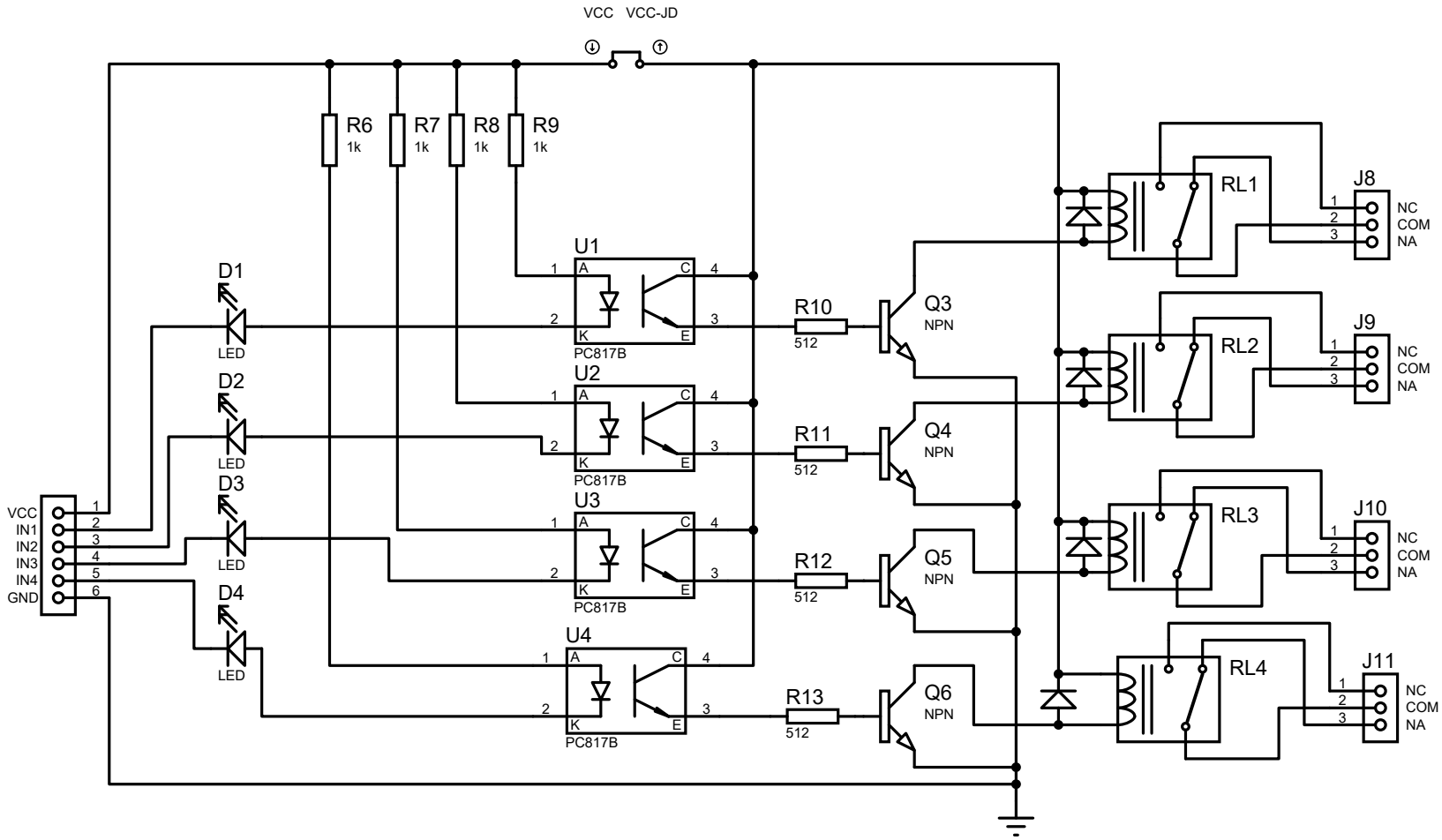

MÓDULO DE RELÉ DE 4 CANALES

Cuadro luminoso			
Autores	Revisor	Fecha	Página
Miguel Antonio Agüera Ruiz Javier Peña Hódar Pedro José Cano Olmo	Enrique Emilio Norro Gañán	21/02/2019	2

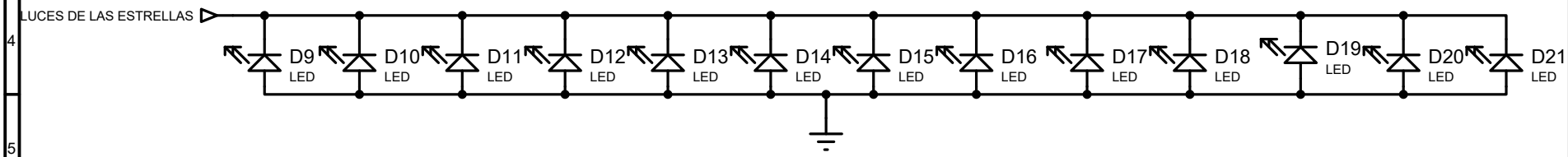

LUCES DE LAS ESTRELLAS

Cuadro luminoso			
Autores	Revisor	Fecha	Página
Miguel Antonio Agüera Ruiz Javier Peña Hódar Pedro José Cano Olmo	Enrique Emilio Norro Gañán	21/02/2019	3

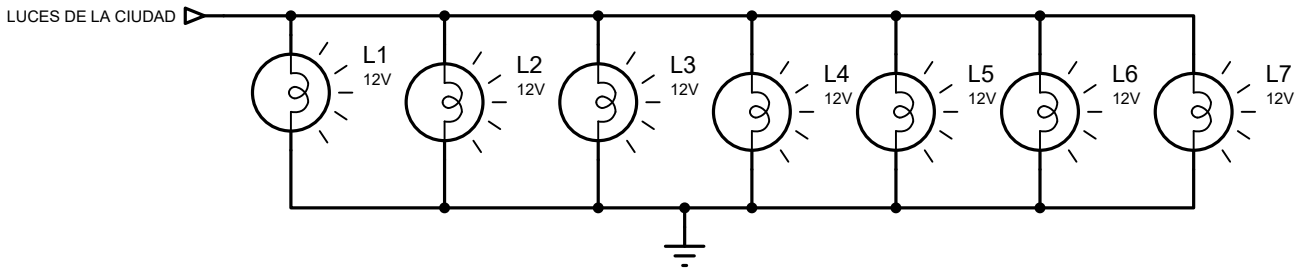

LUCES DE LA CIUDAD

Cuadro luminoso			
Autores	Revisor	Fecha	Página
Miguel Antonio Agüera Ruiz Javier Peña Hódar Pedro José Cano Olmo	Enrique Emilio Norro Gañán	21/02/2019	4

3. Presupuesto

Unidad	Descripcción	Precio Und.	Precio total
1	Arduino UNO	7,50 €	7,50 €
25	LEDS RETROALIMENTACION D2GE-400CA-R3 D2GE-400CB-R3*	- €	- €
4	Resistencia de 330Ω 1/2W	0,12 €	0,48 €
1	Resistencia de 10KΩ 1/4W	0,12 €	0,12 €
7	Portabombilla E10	0,54 €	3,78 €
7	Bombilla 12V 0,3A E10	0,50 €	3,50 €
1	Modulo de x4 Rele 5V	8,95 €	8,95 €
1	Transistor BC547B	0,17 €	0,17 €
1	Transistor BD139	0,39 €	0,39 €
1	Módulo ultrasónico hc-SR04	1,08 €	1,08 €
1	2 BOMBILLAS LED E27 MATE 150 LEXMAN	10,95 €	10,95 €
1	Placa perforada 2x8cm	1,20 €	1,20 €
2	Tornillo philips M2.6X10mm - DIN7985	0,13 €	0,26 €
3	Tuerca M2x1.5mm - hierro	0,07 €	0,21 €
1	Separador hexagonal macho / hembra M3x10mm - metal	0,21 €	0,21 €
2	Separador hexagonal H/H M3x10mm - metal	0,16 €	0,32 €
1	Lnkey 60pcs Barras de silicona transparente	9,90 €	9,90 €
1	Flexo Inspire ARQUITECTO Ref.16418136	9,95 €	9,95 €
1	Regleta de 12 conexiones a tornillo 6mm 5A (negro)	3,15 €	3,15 €
50	Cable multifilar 0,75mm color negro	0,60 €	30,00 €
50	Cable multifilar 0,75mm color verde	0,60 €	30,00 €
60	Cable multifilar 0,75mm - amarillo	0,58 €	34,80 €
1	Fuente de alimentacion de 12V	12,49 €	12,49 €

Total	**169,41 €**

* Son materiales reciclados

Fecha de inicio	21/01/2019
Fecha de finalización	18/03/2019

4. Datasheet

BD135 - BD136
BD139 - BD140

Complementary low voltage transistor

Features

- Products are pre-selected in DC current gain

Application

- General purpose

Description

These epitaxial planar transistors are mounted in the SOT-32 plastic package. They are designed for audio amplifiers and drivers utilizing complementary or quasi-complementary circuits. The NPN types are the BD135 and BD139, and the complementary PNP types are the BD136 and BD140.

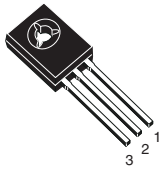

SOT-32

Figure 1. Internal schematic diagram

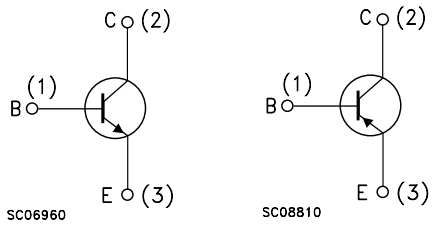

Table 1. Device summary

Order codes	Marking	Package	Packaging
BD135	BD135	SOT-32	Tube
BD135-16	BD135-16		
BD136	BD136		
BD136-16	BD136-16		
BD139	BD139		
BD139-10	BD139-10		
BD139-16	BD139-16		
BD140	BD140		
BD140-10	BD140-10		
BD140-16	BD140-16		

Contents

1 Electrical ratings

Table 2. Absolute maximum ratings

Symbol	Parameter	Value				Unit
		NPN		PNP		
		BD135	BD139	BD136	BD140	
V_{CBO}	Collector-base voltage ($I_E = 0$)	45	80	-45	-80	V
V_{CEO}	Collector-emitter voltage ($I_B = 0$)	45	80	-45	-80	V
V_{EBO}	Emitter-base voltage ($I_C = 0$)	5		-5		V
I_C	Collector current	1.5		-1.5		A
I_{CM}	Collector peak current	3		-3		A
I_B	Base current	0.5		-0.5		A
P_{TOT}	Total dissipation at $T_c \leq 25$ °C	12.5				W
P_{TOT}	Total dissipation at $T_{amb} \leq 25$ °C	1.25				W
T_{stg}	Storage temperature	-65 to 150				°C
T_j	Max. operating junction temperature	150				°C

Table 3. Thermal data

Symbol	Parameter	Max value	Unit
$R_{thj\text{-}case}$	Thermal resistance junction-case	10	°C/W
$R_{thj\text{-}amb}$	Thermal resistance junction-ambient	100	°C/W

2 Electrical characteristics

(T_{case}= 25 °C unless otherwise specified)

Table 4. On/off states

Symbol	Parameter	Polarity	Test conditions	Value			Unit
				Min.	Typ.	Max.	
I_{CBO}	Collector cut-off current (I_E=0)	NPN	V_{CB} = 30 V V_{CB} = 30 V, T_C = 125 °C			0.1 10	µA µA
		PNP	V_{CB} = -30 V V_{CB} = -30 V, T_C = 125 °C			-0.1 -10	µA µA
I_{EBO}	Emitter cut-off current (I_C=0)	NPN	V_{EB} = 5 V			10	µA
		PNP	V_{EB} = -5 V			-10	µA
$V_{CEO(sus)}$ (1)	Collector-emitter sustaining voltage (I_B=0)	NPN	I_C = 30 mA BD135 BD139	 45 80			 V V
		PNP	I_C = -30 mA BD136 BD140	 -45 -80			 V V
$V_{CE(sat)}$ (1)	Collector-emitter saturation voltage	NPN	I_C = 0.5 A, I_B = 0.05 A			0.5	V
		PNP	I_C = -0.5 A, I_B = -0.05 A			-0.5	V
V_{BE} (1)	Base-emitter voltage	NPN	I_C = 0.5 A, V_{CE} = 2 V			1	V
		PNP	I_C = -0.5 A, V_{CE} = -2 V			-1	V
h_{FE} (1)	DC current gain	NPN	I_C = 5 mA, V_{CE} = 2 V I_C = 150 mA, V_{CE} = 2 V I_C = 0.5 A, V_{CE} = 2 V	25 40 25		250	
		PNP	I_C = -5 mA, V_{CE} = -2 V I_C = -150 mA, V_{CE} = -2 V I_C = -0.5 A, V_{CE} = -2 V	25 40 25		250	
h_{FE} (1)	h_{FE} groups	NPN	I_C = 150 mA, V_{CE} = 2 V BD139-10 BD135-16/BD139-16	 63 100		 160 250	
		PNP	I_C = -150 mA, V_{CE} = -2 V BD140-10 BD136-16/BD140-16	 63 100		 160 250	

1. Pulsed: pulse duration = 300 µs, duty cycle 1.5%

2.1 Electrical characteristics (curves)

Figure 2. Safe operating area

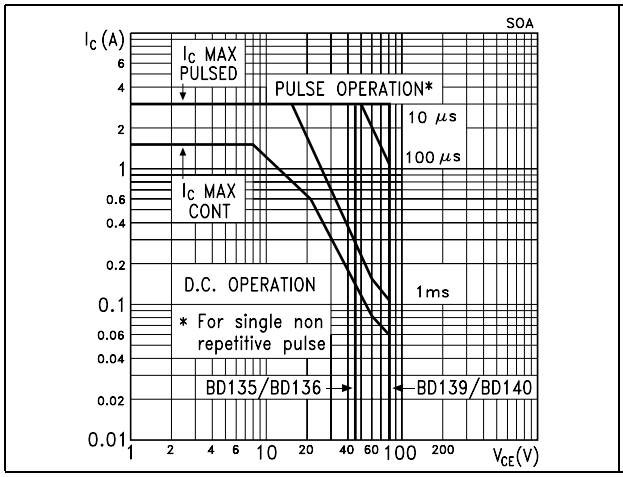

Figure 3. Derating

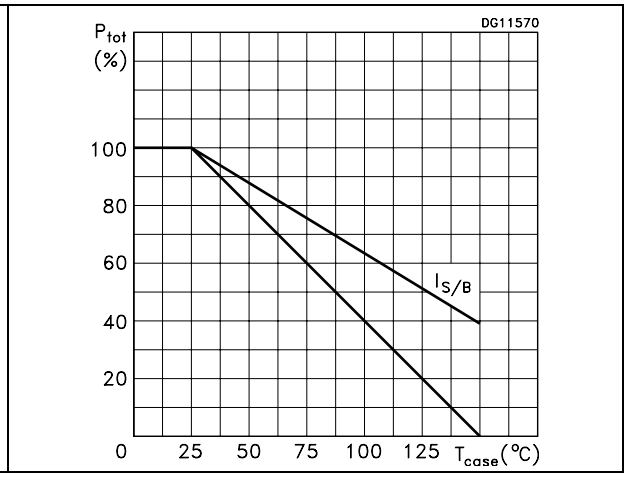

3 Package mechanical data

In order to meet environmental requirements, ST offers these devices in ECOPACK® packages. These packages have a lead-free second level interconnect. The category of second level interconnect is marked on the package and on the inner box label, in compliance with JEDEC Standard JESD97. The maximum ratings related to soldering conditions are also marked on the inner box label. ECOPACK is an ST trademark. ECOPACK specifications are available at: *www.st.com*

SOT-32 (TO-126) MECHANICAL DATA

DIM.	mm.		
	MIN.	TYP	MAX.
A	2.4		2.9
B	0.64		0.88
B1	0.39		0.63
D	10.5		11.05
E	7.4		7.8
e	2.04	2.29	2.54
e1	4.07	4.58	5.08
L	15.3		16
P	2.9		3.2
Q		3.8	
Q1	1		1.52
H2		2.15	
I		1.27	

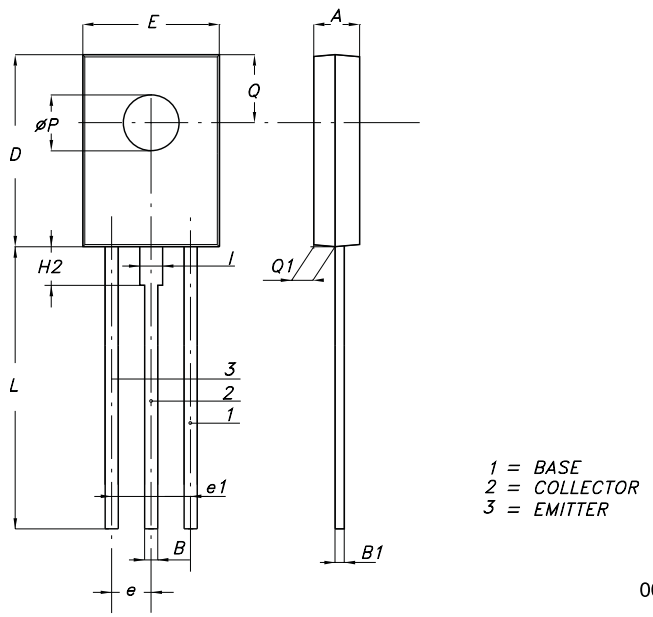

4 Revision history

Table 5. Document revision history

Date	Revision	Changes
16-Sep-2001	4	
22-May-2008	5	Mechanical data has been updated.

Please Read Carefully:

Information in this document is provided solely in connection with ST products. STMicroelectronics NV and its subsidiaries (“ST”) reserve the right to make changes, corrections, modifications or improvements, to this document, and the products and services described herein at any time, without notice.

All ST products are sold pursuant to ST’s terms and conditions of sale.

Purchasers are solely responsible for the choice, selection and use of the ST products and services described herein, and ST assumes no liability whatsoever relating to the choice, selection or use of the ST products and services described herein.

No license, express or implied, by estoppel or otherwise, to any intellectual property rights is granted under this document. If any part of this document refers to any third party products or services it shall not be deemed a license grant by ST for the use of such third party products or services, or any intellectual property contained therein or considered as a warranty covering the use in any manner whatsoever of such third party products or services or any intellectual property contained therein.

UNLESS OTHERWISE SET FORTH IN ST’S TERMS AND CONDITIONS OF SALE ST DISCLAIMS ANY EXPRESS OR IMPLIED WARRANTY WITH RESPECT TO THE USE AND/OR SALE OF ST PRODUCTS INCLUDING WITHOUT LIMITATION IMPLIED WARRANTIES OF MERCHANTABILITY, FITNESS FOR A PARTICULAR PURPOSE (AND THEIR EQUIVALENTS UNDER THE LAWS OF ANY JURISDICTION), OR INFRINGEMENT OF ANY PATENT, COPYRIGHT OR OTHER INTELLECTUAL PROPERTY RIGHT.

UNLESS EXPRESSLY APPROVED IN WRITING BY AN AUTHORIZED ST REPRESENTATIVE, ST PRODUCTS ARE NOT RECOMMENDED, AUTHORIZED OR WARRANTED FOR USE IN MILITARY, AIR CRAFT, SPACE, LIFE SAVING, OR LIFE SUSTAINING APPLICATIONS, NOR IN PRODUCTS OR SYSTEMS WHERE FAILURE OR MALFUNCTION MAY RESULT IN PERSONAL INJURY, DEATH, OR SEVERE PROPERTY OR ENVIRONMENTAL DAMAGE. ST PRODUCTS WHICH ARE NOT SPECIFIED AS "AUTOMOTIVE GRADE" MAY ONLY BE USED IN AUTOMOTIVE APPLICATIONS AT USER’S OWN RISK.

Resale of ST products with provisions different from the statements and/or technical features set forth in this document shall immediately void any warranty granted by ST for the ST product or service described herein and shall not create or extend in any manner whatsoever, any liability of ST.

ST and the ST logo are trademarks or registered trademarks of ST in various countries.

Information in this document supersedes and replaces all information previously supplied.

The ST logo is a registered trademark of STMicroelectronics. All other names are the property of their respective owners.

© 2008 STMicroelectronics - All rights reserved

STMicroelectronics group of companies

Australia - Belgium - Brazil - Canada - China - Czech Republic - Finland - France - Germany - Hong Kong - India - Israel - Italy - Japan - Malaysia - Malta - Morocco - Singapore - Spain - Sweden - Switzerland - United Kingdom - United States of America

www.st.com

BC547B

General Purpose Transistor

Features:

- NPN general purpose transistors, especially suited for use in driver stages of audio amplifiers, low noise input stages of tape recorders, HI-FI amplifiers, signal processing circuits of television receivers.

TO-92 Plastic Package

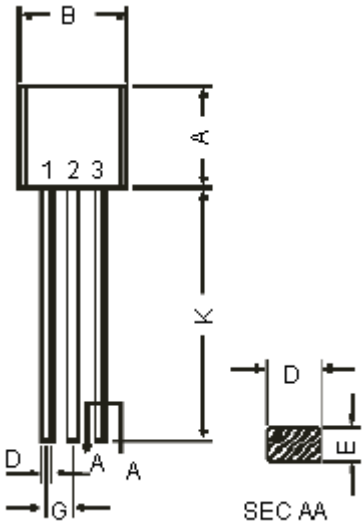

Dimensions	Minimum	Maximum
A	4.32	5.33
B	4.45	5.20
C	3.18	4.19
D	0.41	0.55
E	0.35	0.50
F	5°	
G	1.14	1.40
H		1.53
K	12.70	-

Dimensions : Millimetres

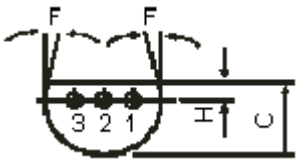

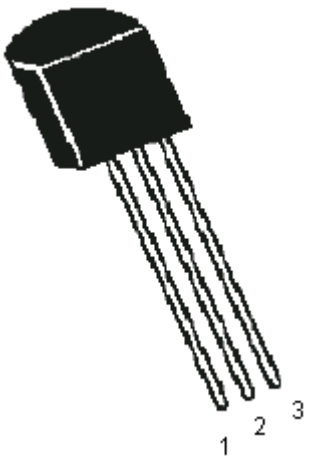

Pin Configuration:

1. Collector
2. Base
3. Emitter

BC547B

General Purpose Transistor

multicomp

Absolute Maximum Ratings (T_a = 25°C unless otherwise specified)

Parameters	Symbol	Value	Unit
Collector Emitter Voltage	V_{CEO}	45	V
Collector Emitter Voltage	V_{CES}	50	
Collector Base Voltage	V_{CBO}		
Emitter Base Voltage	V_{EBO}	6.0	
Collector Current Continuous Peak	I_C I_{CM}	100 200	mA
Base Current Peak	I_{BM}	200	
Emitter Current Peak	I_{EM}		
Power Dissipation at T_a = 25°C Derate above 25°C	P_{TA}	500 4.0	mW mW/°C
Storage Temperature	T_{stg}	-65 to +150	°C
Junction Temperature	T_j	150	
Thermal Resistance			
Junction to Ambient	$R_{th\ (j\text{-}a)}$	250	°C/W

Electrical Characteristics (T_a = 25°C unless otherwise specified)

Parameters	Symbol	Test Condition	Value	Unit
Collector Emitter Voltage	V_{CEO}	I_C = 1mA, I_B = 0	>45	V
Collector Base Voltage	V_{CBO}	I_C = 10µA, I_E = 0	>50	
Emitter Base Voltage	V_{EBO}	I_E = 10µA, I_C = 0	>6.0	
Collector Cut off Current	I_{CBO}	V_{CB} = 30V, I_E = 0 T_J = 150°C V_{CB} = 30V, I_E = 0	<50 <5.0	nA µA
	I_{CES}	V_{CE} = 50V, V_{BE} = 0 T_J = 125°C	<15	nA
Collector Cut off Current		V_{CE} = 50V, V_{BE} = 0	<4.0	µA
DC Current Gain	h_{FE}	I_C = 2mA, V_{CE} = 5V	200	-
Collector Emitter Saturation Voltage	$V_{CE\ (sat)}$	I_C = 10mA, I_B = 0.5mA I_C = 100mA, I_B = 5mA	<0.25 <0.60	V
Base Emitter Saturation Voltage	$V_{BE\ (sat)}$	I_C = 10mA, I_B = 0.5mA I_C = 100mA, I_B = 5mA	Typical 0.70 Typical 0.90	
Base Emitter On Voltage	$V_{BE\ (on)}$	I_C = 2mA, V_{CE} = 5V I_C = 10mA, V_{CE} = 5V	0.55 - 0.70 <0.72	

Electrical Characteristics (T_a = 25°C unless otherwise specified)

Parameters	Symbol	Test Condition	Value	Units
Dynamic Characteristics				
Transition Frequency	f_T	I_C = 10mA, V_{CE} = 5V f = 100MHz	Typical 300	MHz
Collector Output Capacitance	C_{cbo}	V_{CB} = 10V, f = 1MHz	<4.50	pF
Emitter Input Capacitance	C_{ib}	V_{EB} = 0.5V, f = 1MHz	Typical 9.0	pF
Noise Figure	NF	I_C = 0.2mA, V_{CE} = 5V R_s = 1kΩ, f = 200Hz	<10	dB
Small Signal Current Gain	h_{fe}	I_C = 2mA, V_{CE} = 5V	Typical 330	-
Input Impedance	h_{ie}		3.2 - 8.5	kΩ
Voltage Feedback Ratio	h_{re}		Typical 2.0	x 10^{-4}
Output Impedance	h_{oe}		<60	μΩ

Specifications

V_{CEO} (V)	V_{CBO} Maximum (V)	I_C (A)	h_{FE} Minimum at I_C = 2mA	f_T (Typical) MHz	P_{tot} (mW)	Package	Part Number
45	50	0.1	200	300	625	TO-92	BC547B

BC557B

General Purpose Transistor

Notes:

International Sales Offices:

AUSTRALIA – Farnell
Tel No: ++61 1300 361 005
Fax No: ++61 1300 361 225

AUSTRIA – Farnell
Tel No: ++ 43 662 2180 680
Fax No: ++ 43 662 2180 670

BELGIUM – Farnell
Tel No: ++ 32 3 475 2810
Fax No: ++ 32 3 227 3648

BRAZIL – Farnell-Newark
Tel No: ++ 55 11 4066 9400
Fax No: ++ 55 11 4066 9410

CHINA – Farnell-Newark
Tel No: ++86 10 6238 5152
Fax No: ++86 10 6238 5022

CZECH REPUBLIC - Farnell
Tel No: ++ 44 870 1200 208
Fax No: ++ 44 870 1200 209

DENMARK – Farnell
Tel No: ++ 45 44 53 66 44
Fax No: ++ 45 44 53 66 06

ESTONIA – Farnell
Tel No: ++ 358 9 560 7780
Fax No: ++ 358 9 345 5411

FINLAND – Farnell
Tel No: ++ 358 9 560 7780
Fax No: ++ 358 9 345 5411

FRANCE – Farnell
Tel No: ++ 33 474 68 99 99
Fax No: ++ 33 474 68 99 90

GERMANY – Farnell
Tel No: ++ 49 89 61 39 39 39
Fax No: ++ 49 89 613 59 01

HONG KONG – Farnell-Newark
Tel No: ++ 852 2268 9888
Fax No: ++ 852 2268 9899

HUNGARY - Farnell
Tel No: ++ 44 870 1200 208
Fax No: ++ 44 870 1200 209

INDIA - Farnell
Tel No: ++ 44 870 1200 208
Fax No: ++ 44 870 1200 209

IRELAND – Farnell
Tel No: ++ 353 1 830 9277
Fax No: ++ 353 1 830 9016

ISRAEL – Farnell
Tel No: ++ 180 937 0015
Fax No: ++ 180 937 0014

ITALY – Farnell
Tel No: ++ 39 02 93 995 200
Fax No: ++ 39 02 93 995 300

MALAYSIA – Farnell-Newark
Tel No: ++ 60 3 7873 8000
Fax No: ++ 60 3 7873 7000

NETHERLANDS – Farnell
Tel No: ++ 31 30 241 7373
Fax No: ++ 31 30 241 7333

NEW ZEALAND – Farnell
Tel No: 0800 90 80 80
Fax No: 0800 90 80 81

NORWAY – Farnell
Tel No: 800 146 70
Fax No: 800 146 76

PORTUGAL – Farnell
Tel No: ++ 34 93 475 8804
Fax No: ++ 34 93 474 5288

RUSSIA – Farnell
Tel No: ++ 44 870 1200 208
Fax No: ++ 44 870 1200 209

SINGAPORE – Farnell-Newark
Tel No: ++ 65 6788 0200
Fax No: ++ 65 6788 0300

SPAIN – Farnell
Tel No: 901 20 20 80
Fax No: 901 20 20 90

SWEDEN – Farnell
Tel No: ++ 46 8 730 50 00
Fax No: ++ 46 8 83 52 62

SWITZERLAND – Farnell
Tel No: ++ 44 204 64 64
Fax No: ++ 44 204 64 54

UK – Farnell
Tel No: ++ 44 8701 200 200
Fax No: ++ 44 8701 200 201

UK – CPC
++ 44 8701 202 530
++ 44 8701 202 531

USA – Newark
Tel No: 800 463 9275

EXPORT – Farnell
Tel No: ++ 44 8701 200 208
Fax No: ++ 44 8701 200 209

For enquiries from all other markets

http://www.farnell.com
http://www.newark.com
http://www.cpc.co.uk

Disclaimer This data sheet and its contents (the "Information") belong to the Premier Farnell Group (the "Group") or are licensed to it. No licence is granted for the use of it other than for information purposes in connection with the products to which it relates. No licence of any intellectual property rights is granted. The Information is subject to change without notice and replaces all data sheets previously supplied. The Information supplied is believed to be accurate but the Group assumes no responsibility for its accuracy or completeness, any error in or omission from it or for any use made of it. Users of this data sheet should check for themselves the Information and the suitability of the products for their purpose and not make any assumptions based on information included or omitted. Liability for loss or damage resulting from any reliance on the Information or use of it (including liability resulting from negligence or where the Group was aware of the possibility of such loss or damage arising) is excluded. This will not operate to limit or restrict the Group's liability for death or personal injury resulting from its negligence. SPC Multicomp is the registered trademark of the Group. © Premier Farnell plc 2008.

User Guide

4 Channel 5V Optical Isolated Relay Module

This is a LOW Level 5V 4-channel relay interface board, and each channel needs a 15-20mA driver current. It can be used to control various appliances and equipment with large current. It is equipped with high-current relays that work under AC250V 10A or DC30V 10A. It has a standard interface that can be controlled directly by microcontroller. This module is optically isolated from high voltage side for safety requirement and also prevent ground loop when interface to microcontroller.

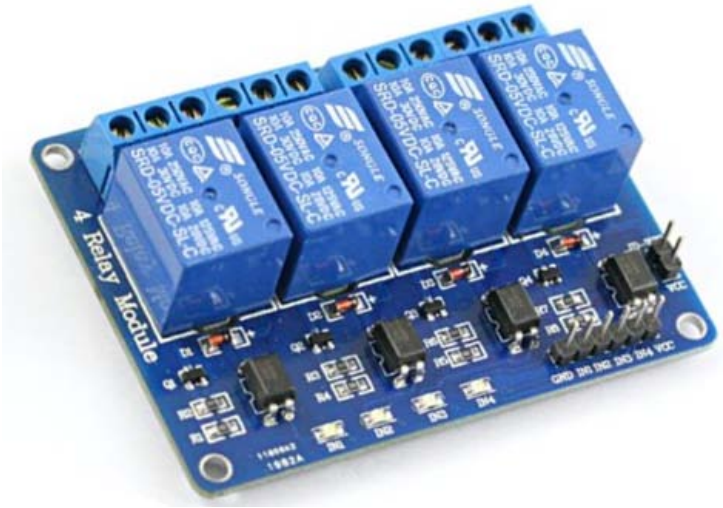

Brief Data:

- Relay Maximum output: DC 30V/10A, AC 250V/10A.
- 4 Channel Relay Module with Opto-coupler. LOW Level Trigger expansion board, which is compatible with Arduino control board.
- Standard interface that can be controlled directly by microcontroller (8051, AVR, *PIC, DSP, ARM, ARM, MSP430, TTL logic).
- Relay of high quality low noise relays SPDT. A common terminal, a normally open, one normally closed terminal.
- Opto-Coupler isolation, for high voltage safety and prevent ground loop with microcontroller.

Schematic:

VCC and RY-VCC are also the power supply of the relay module. When you need to drive a large power load, you can take the jumper cap off and connect an extra power to RY-VCC to supply the relay; connect VCC to 5V of the MCU board to supply input signals.

NOTES: If you want complete optical isolation, connect "Vcc" to Arduino +5 volts but do NOT connect Arduino Ground. Remove the Vcc to JD-Vcc jumper. Connect a separate +5 supply to "JD-Vcc" and board Gnd. This will supply power to the transistor drivers and relay coils.

If relay isolation is enough for your application, connect Arduino +5 and Gnd, and leave Vcc to JD-Vcc jumper in place.

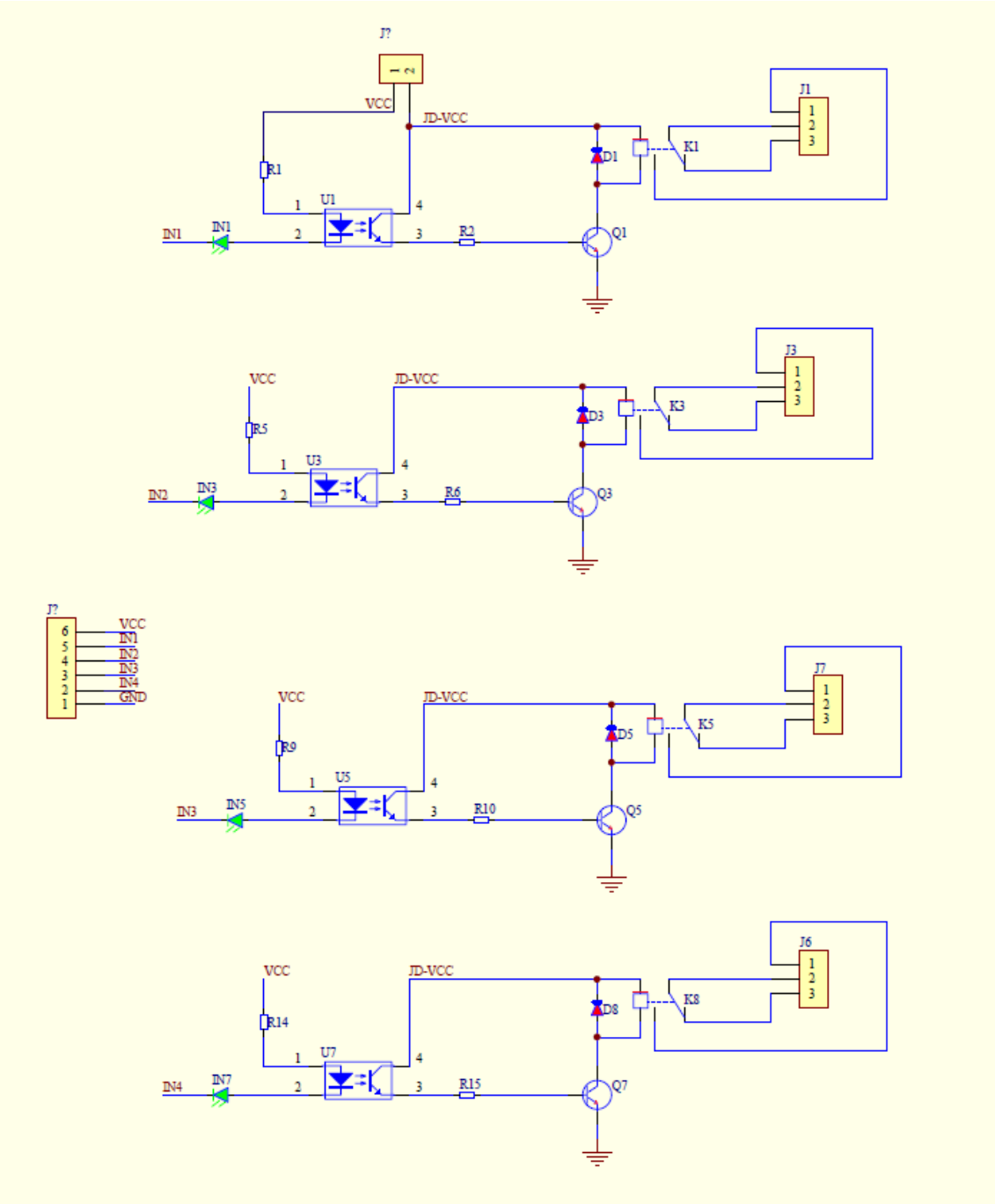

4 Channel Relay Module Schematic

It is sometimes possible to use this relay boards with 3.3V signals, if the JD-VCC (Relay Power) is provided from a +5V supply and the VCC to JD-VCC jumper is removed. That 5V relay supply could be totally isolated from the 3.3V device, or have a common ground if opto-isolation is not needed. If used with isolated 3.3V signals, VCC (To the input of the opto-isolator, next to the IN pins) should be connected to the 3.3V device's +3.3V supply.

NOTE: Some Raspberry-Pi users have found that some relays are reliable and others do not actuate sometimes. It may be necessary to change the value of R1 from 1000 ohms to something like 220 ohms, or supply +5V to the VCC connection.

NOTE: The digital inputs from Arduino are Active LOW: The relay actuates and LED lights when the input pin is LOW, and turns off on HIGH.

Module Layout:

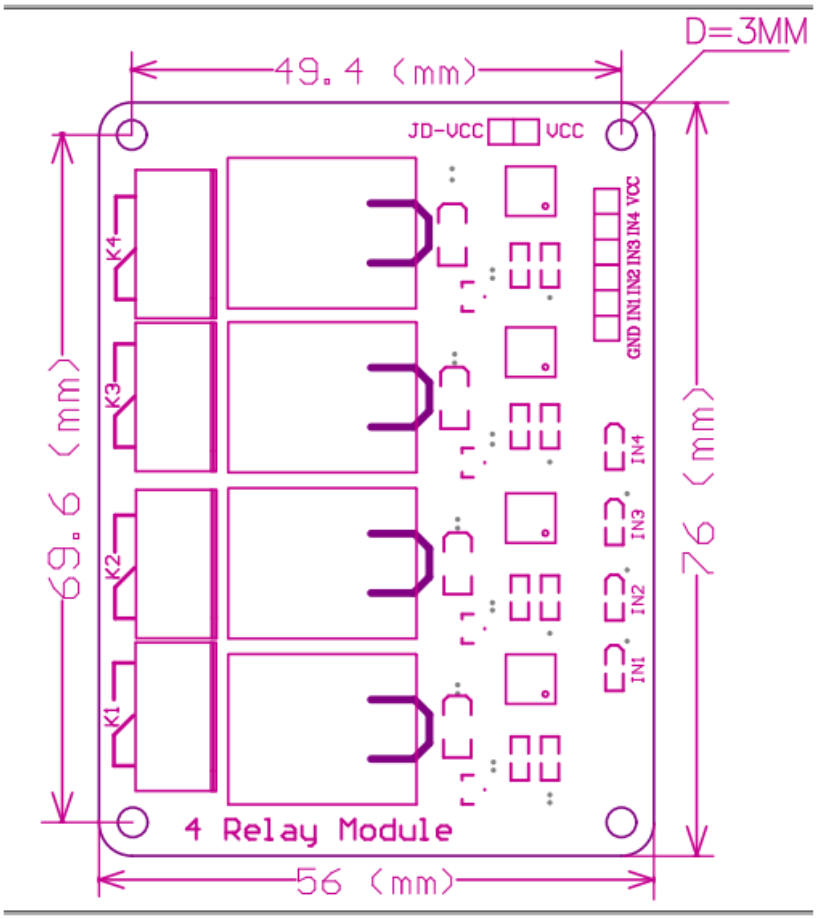

Operating Principle:

See the picture below: A is an electromagnet, B armature, C spring, D moving contact, and E fixed contacts. There are two fixed contacts, a normally closed one and a normally open one. When the coil is not energized, the normally open contact is the one that is off, while the normally closed one is the other that is on.

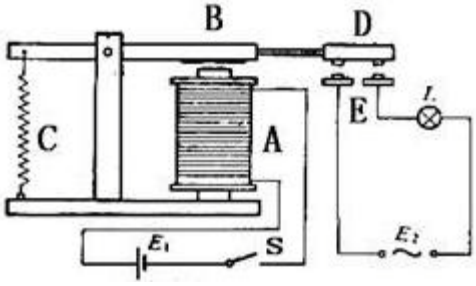

Supply voltage to the coil and some currents will pass through the coil thus generating the electromagnetic effect. So the armature overcomes the tension of the spring and is attracted to the core, thus closing the moving contact of the armature and the normally open (NO) contact or you may say releasing the former and the normally closed (NC) contact. After the coil is de-energized, the electromagnetic force disappears and the armature moves back to the original position, releasing the moving contact and normally closed contact. The closing and releasing of the contacts results in power on and off of the circuit.

Input:

VCC : Connected to positive supply voltage (supply power according to relay voltage)

GND : Connected to supply ground.

IN1: Signal triggering terminal 1 of relay module

IN2: Signal triggering terminal 2 of relay module

IN3: Signal triggering terminal 3 of relay module

IN4: Signal triggering terminal 4 of relay module

Output:

Each module of the relay has one NC (normally close), one NO (normally open) and one COM (Common) terminal. So there are 4 NC, 4 NO and 4 COM of the channel relay in total. NC stands for the normal close port contact and the state without power. NO stands for the normal open port contact and the state with power. COM means the common port. You can choose NC port or NO port according to whether power or not.

Testing Setup:

When a low level is supplied to signal terminal of the 4-channel relay, the LED at the output terminal will light up. Otherwise, it will turn off. If a periodic high and low level is supplied to the signal terminal, you can see the LED will cycle between on and off.

For Arduino：

Step 1：

Connect the signal terminal IN1、IN2, IN3 & IN4 of 4-channel relay to digital pin 4, 5, 6, 7 of the Arduino Uno or ATMega2560 board, and connect an LED at the output terminal.

IN1> 4; IN2> 5; IN3>6; IN4>7

Step 2:

Upload the sketch "4 Channel Relay Demo " to the Arduino Uno or ATMega2560 board. Then you can see the LED cycle between on and off.

The actual figure is shown below:

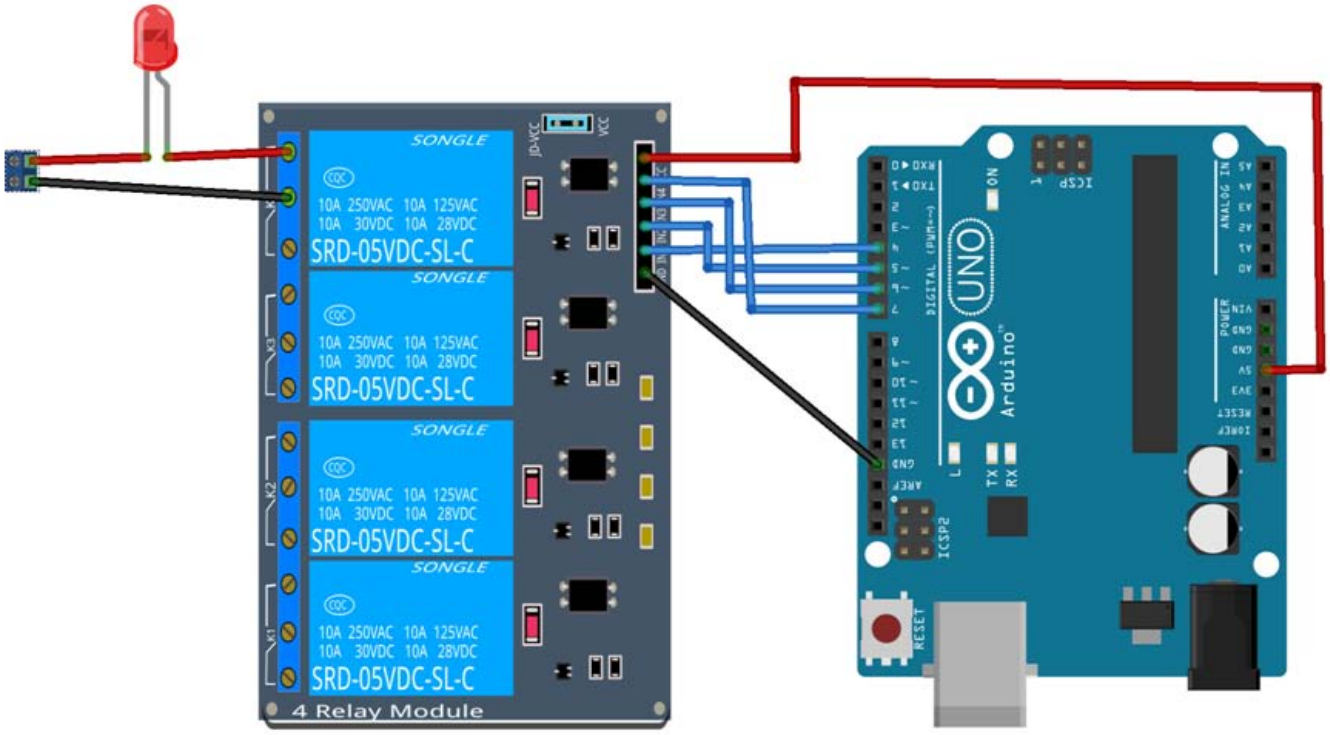

Arduino Sketch: 4 Channel Relay Demo

```
/*************************************************
   Name: 4 channel_relay
   Description: control the 4 channel relay module to ON or OFF
   Website: www.handsontec.com
   Email: techsupport@handsontec.com
*****************************************************/

//the relays connect to

int RelayControl1 = 4;    // Digital Arduino Pin used to control the motor
int RelayControl2 = 5;
int RelayControl3 = 6;
int RelayControl4 = 7;


void setup()
{
  Serial.begin(9600);
  pinMode(RelayControl1, OUTPUT);
  pinMode(RelayControl2, OUTPUT);
  pinMode(RelayControl3, OUTPUT);
  pinMode(RelayControl4, OUTPUT);
}


void loop()
{

  digitalWrite(RelayControl1,HIGH);// NO1 and COM1 Connected (LED on)
  delay(1000);
```

```
  digitalWrite(RelayControl1,LOW);// NO1 and COM1 disconnected (LED off)
  delay(1000);
  digitalWrite(RelayControl2,HIGH);
  delay(1000);
  digitalWrite(RelayControl2,LOW);
  delay(1000);
  digitalWrite(RelayControl3,HIGH);
  delay(1000);
  digitalWrite(RelayControl3,LOW);
  delay(1000);
  digitalWrite(RelayControl4,HIGH);
  delay(1000);
  digitalWrite(RelayControl4,LOW);
  delay(1000);
}
```

Overview

The Arduino Uno is a microcontroller board based on the ATmega328 (datasheet). It has 14 digital input/output pins (of which 6 can be used as PWM outputs), 6 analog inputs, a 16 MHz crystal oscillator, a USB connection, a power jack, an ICSP header, and a reset button. It contains everything needed to support the microcontroller; simply connect it to a computer with a USB cable or power it with a AC-to-DC adapter or battery to get started.

The Uno differs from all preceding boards in that it does not use the FTDI USB-to-serial driver chip. Instead, it features the Atmega8U2 programmed as a USB-to-serial converter.

"Uno" means one in Italian and is named to mark the upcoming release of Arduino 1.0. The Uno and version 1.0 will be the reference versions of Arduino, moving forward. The Uno is the latest in a series of USB Arduino boards, and the reference model for the Arduino platform; for a comparison with previous versions, see the index of Arduino boards.

Summary

Microcontroller	ATmega328
Operating Voltage	5V
Input Voltage (recommended)	7-9V
Input Voltage (limits)	6-20V
Digital I/O Pins	14 (of which 6 provide PWM output)
Analog Input Pins	6
DC Current per I/O Pin	40 mA
DC Current for 3.3V Pin	50 mA
Flash Memory	32 KB (ATmega328) (0.5 KB used by bootloader)
SRAM	2 KB (ATmega328)
EEPROM	1 KB (ATmega328)
Clock Speed	16 MHz

Schematic & Reference Design

EAGLE files: arduino-uno-reference-design.zip

Schematic: arduino-uno-schematic.pdf

Power

The Arduino Uno can be powered via the USB connection or with an external power supply. The power source is selected automatically.

External (non-USB) power can come either from an AC-to-DC adapter (wall-wart) or battery. The adapter can be connected by plugging a 2.1mm centre-positive plug into the board's power jack. Leads from a battery can be inserted in the Gnd and Vin pin headers of the POWER connector.

The board can operate on an external supply of 6 to 20 volts. If supplied with less than 7V, however, the 5V pin may supply less than five volts and the board may be unstable. If using more than 12V, the voltage regulator may overheat and damage the board. The recommended range is 7 to 12 volts.

The power pins are as follows:

- **VIN.** The input voltage to the Arduino board when it's using an external power source (as opposed to 5 volts from the USB connection or other regulated power source). You can supply voltage through this pin, or, if supplying voltage via the power jack, access it through this pin.
- **5V.** The regulated power supply used to power the microcontroller and other components on the board. This can come either from VIN via an on-board regulator, or be supplied by USB or another regulated 5V supply.
- **3V3.** A 3.3 volt supply generated by the on-board regulator. Maximum current draw is 50 mA.
- **GND.** Ground pins.

Memory

The ATmega328 has 32 KB (with 0.5 KB used for the bootloader). It also has 2 KB of SRAM and 1 KB of EEPROM (which can be read and written with the EEPROM library).

Input and Output

Each of the 14 digital pins on the Uno can be used as an input or output, using pinMode(), digitalWrite(), and digitalRead() functions. They operate at 5 volts. Each pin can provide or receive a maximum of 40 mA and has an internal pull-up resistor (disconnected by default) of 20-50 kOhms. In addition, some pins have specialized functions:

- **Serial: 0 (RX) and 1 (TX).** Used to receive (RX) and transmit (TX) TTL serial data. These pins are connected to the corresponding pins of the ATmega8U2 USB-to-TTL Serial chip.
- **External Interrupts: 2 and 3.** These pins can be configured to trigger an interrupt on a low value, a rising or falling edge, or a change in value. See the attachInterrupt() function for details.
- **PWM: 3, 5, 6, 9, 10, and 11.** Provide 8-bit PWM output with the analogWrite() function.
- **SPI: 10 (SS), 11 (MOSI), 12 (MISO), 13 (SCK).** These pins support SPI communication using the SPI library.
- **LED: 13.** There is a built-in LED connected to digital pin 13. When the pin is HIGH value, the LED is on, when the pin is LOW, it's off.

The Uno has 6 analog inputs, labeled A0 through A5, each of which provide 10 bits of resolution (i.e. 1024 different values). By default they measure from ground to 5 volts, though is it possible to change the upper end of their range using the AREF pin and the analogReference() function. Additionally, some pins have specialized functionality:

- **I^2C: 4 (SDA) and 5 (SCL).** Support I^2C (TWI) communication using the Wire library.

There are a couple of other pins on the board:

- **AREF.** Reference voltage for the analog inputs. Used with analogReference().
- **Reset.** Bring this line LOW to reset the microcontroller. Typically used to add a reset button to shields which block the one on the board.

See also the mapping between Arduino pins and ATmega328 ports?

Communication

The Arduino Uno has a number of facilities for communicating with a computer, another Arduino, or other microcontrollers. The ATmega328 provides UART TTL (5V) serial communication, which is available on digital pins 0 (RX) and 1 (TX). An ATmega8U2 on the board channels this serial communication over USB and appears as a virtual com port to software on the computer. The '8U2 firmware uses the standard USB COM drivers, and no external driver is needed. However, on Windows, a .inf file is required. The Arduino software includes a serial monitor which allows simple textual data to be sent to and from the Arduino board. The RX and TX LEDs on the board will flash when data is being transmitted via the USB-to-serial chip and USB connection to the computer (but not for serial communication on pins 0 and 1).

A SoftwareSerial library allows for serial communication on any of the Uno's digital pins.

The ATmega328 also supports I2C (TWI) and SPI communication. The Arduino software includes a Wire library to simplify use of the I2C bus; see the documentation for details. For SPI communication, use the SPI library.

Programming

The Arduino Uno can be programmed with the Arduino software (download). Select "Arduino Uno from the **Tools > Board** menu (according to the microcontroller on your board). For details, see the reference and tutorials.

The ATmega328 on the Arduino Uno comes preburned with a bootloader that allows you to upload new code to it without the use of an external hardware programmer. It communicates using the original STK500 protocol (reference, C header files).

You can also bypass the bootloader and program the microcontroller through the ICSP (In-Circuit Serial Programming) header; see these instructions for details.

The ATmega8U2 firmware source code is available . The ATmega8U2 is loaded with a DFU bootloader, which can be activated by connecting the solder jumper on the back of the board (near the map of Italy) and then resetting the 8U2. You can then use Atmel's FLIP software (Windows) or the DFU programmer (Mac OS X and Linux) to load a new firmware. Or you can use the ISP header with an external programmer (overwriting the DFU bootloader). See this user-contributed tutorial for more information.

Automatic (Software) Reset

Rather than requiring a physical press of the reset button before an upload, the Arduino Uno is designed in a way that allows it to be reset by software running on a connected computer. One of the hardware flow control lines (DTR) of the ATmega8U2 is connected to the reset line of the ATmega328 via a 100 nanofarad capacitor. When this line is asserted (taken low), the reset line drops long enough to reset the chip. The Arduino software uses this capability to allow you to upload code by simply pressing the upload button in the Arduino environment. This means that the bootloader can have a shorter timeout, as the lowering of DTR can be well-coordinated with the start of the upload.

This setup has other implications. When the Uno is connected to either a computer running Mac OS X or Linux, it resets each time a connection is made to it from software (via USB). For the following half-second or so, the bootloader is running on the Uno. While it is programmed to ignore malformed data (i.e. anything besides an upload of new code), it will intercept the first few bytes of data sent to the board after a connection is opened. If a sketch running on the board receives one-time configuration or other data when it first starts, make sure that the software with which it communicates waits a second after opening the connection and before sending this data.

The Uno contains a trace that can be cut to disable the auto-reset. The pads on either side of the trace can be soldered together to re-enable it. It's labeled "RESET-EN". You may also be able to disable the auto-reset by connecting a 110 ohm resistor from 5V to the reset line; see this forum thread for details.

USB Overcurrent Protection

The Arduino Uno has a resettable polyfuse that protects your computer's USB ports from shorts and overcurrent. Although most computers provide their own internal protection, the fuse provides an extra layer of protection. If more than 500 mA is applied to the USB port, the fuse will automatically break the connection until the short or overload is removed.

Physical Characteristics

The maximum length and width of the Uno PCB are 2.7 and 2.1 inches respectively, with the USB connector and power jack extending beyond the former dimension. Four screw holes allow the board to be attached to a surface or case. Note that the distance between digital pins 7 and 8 is 160 mil (0.16"), not an even multiple of the 100 mil spacing of the other pins.